Industrial Conveyor Specialists

Installation, Maintenance & Parts Manual
For

MODEL 640
Hinged Steel Belt Conveyor

to View the Instructional Videos

"Installing a Hinged Steel Belt Conveyor"
https://youtu.be/HliE9lGVIBM

"Setting Tension on a Hinged Steel Belt"
https://youtu.be/7Za3vqVwjvE

Titan Conveyors
735 Industrial Loop Road
New London, WI 54961
920-982-6600
800-558-3616
FAX 920-982-7750
E-mail: sales@titanconveyors.com
Website: www.titanconveyors.com

Serial No.

Go to Table of Contents

TITAN 640 MANUAL

TABLE OF CONTENTS

Page 2 ..... Table of Contents
Warranty
Page 3 ..... Safety/Safety Decals
Page 4 ..... Introduction
Receiving
Installation
Frame Assembly
Page 5 ..... Support Assembly
Page 6 ..... Belt Checklist
Belt Installation
Page 8 ..... Component Checklist
Start Up
Torque Limiter(See Separate Instructions)
Maintenance
Belt Care
Page 9 ..... Motors
Reducers
Page 11 ..... Chains and Sprockets
Bearings
Page 12 ..... V-Belt & Sheaves
Page 13 ..... Model 640 Blow Apart Drawing

Warranty

(A) Seller warrants that the material in and the workmanship on the equipment manufactured by TITAN will be free from defects at time of shipment. If during the first year from the date of shipment, the Buyer establishes to the seller's satisfaction that any part or parts manufactured by TITAN were defective at the time of shipment, TITAN will, at its own expense, repair or replace (but not install) replacement parts. For a time purpose of this warranty, one year will constitute 2080 hours of operation based on an 8 hour day. Sellers liability under this warranty is limited to replacement parts only and the seller will make no allowance for corrective work done unless agreed to by the seller in writing. Charges for correction of defects by others will not be acceptable, unless so authorized in writing, prior to the work being performed, by an officer of the company. Damage caused by deterioration due to extraordinary wear and tear (including, but not in limitation, use said equipment to handle products of a size, weight and shape or at speeds or methods which differ from information originally provided), chemical action, wear caused by the presence of abrasive materials or by improper maintenance or lubrication or improper storage prior to installation, shall not constitute defects. Failure to install equipment properly shall not constitute defects. Warranty does not cover consumable items. Warranty does not cover belt tracking or adjustment at installation or periodic adjustment that may be required during normal operation. Refer to the maintenance manual for belt tracking instructions.

(B) Seller has made no representation, warranties, or guarantees, expressed or implied, not expressly set forth on above paragraph. Seller shall not be liable hereunder for any consequential damages included but not in limitation, damages which may arise from loss of anticipated profits or production or from increased cost of operation or spoilage of material.

(C) The components used in manufacture of said equipment which were manufactured by others will carry such manufacturers' customary warranty, which seller will obtain for buyer upon request.

(D) No representative of TITAN has been conferred with any authority to waive, alter, vary or add to the terms of warranty state herein, without prior authorization in writing executed by an officer of the company.

(E) The foregoing is in lieu of any and all other warranties, expressed or implied, or those extending beyond the description of the product.

Safety

The Safety alert symbol is used with the signal words

⚠ DANGER, ⚠ WARNING and ⚠ CAUTION to alert you to safety messages.

They are used in safety decals on the unit and with proper operation and procedures in this manual. They alert you to the existence and relative degree of hazards.

Understand the safety message. It contains important information about personal safety on or near the conveyor.

DANGER — **POTENTIALLY HAZARDOUS SITUATION** which if not avoided, could result in death or serious injury.

WARNING — **POTENTIALLY HAZARDOUS SITUATION** which if not avoided, may result in minor or moderate injury. It may also be used to alert against unsafe practices.

CAUTION — **POTENTIALLY DESTRUCTIVE SITUATION** which if not avoided, may result in damage or reduce the longevity of the equipment.

Safety Decals

ALWAYS replace missing or damaged Safety Decals.

Operational Safety

Keep Hands, feet, hair and loose clothing **away** when conveyor is running

NEVER climb, sit, walk or ride on conveyor

ALWAYS lock out power before servicing to avoid electrical shock.

ALWAYS keep hair and loose clothing away.

ALWAYS keep hands away from conveyor while moving.

Never run conveyor without guards in place.

INTRODUCTION

The management and employees of Titan Industries thank you for specifying Titan equipment. This manual will give you the basic information to install and maintain your equipment. If special circumstances or questions come up call Titan at 920-982-6600.

I. RECEIVING

Upon delivery of your Titan conveyor, check the packing slip or bill of lading accompanying the unit. If any components are missing, contact Titan IMMEDIATELY with a description of the missing components along with the conveyor serial number(s). The serial number is found on the serial plate normally positioned by the drive.

Check the unit(s) over carefully upon arrival for damage. If you find any damage note it on the bill of lading. ***YOU MUST*** also file a claim ***IMMEDIATELY*** with the carrier.

II. INSTALLATION

- ✓ **WEAR SAFETY GLASSES, SAFETY SHOES, AND GLOVES.**
- ✓ **HAVE AREA AROUND INSTALLATION SITE CLEARED OF DEBRIS.**
- ✓ **LOCKOUT POWER TO CONVEYOR(S) UNTIL START-UP.**
- ✓ **LOOK OUT FOR SHARP EDGES WHILE HANDLING CONVEYOR COMPONENTS.**
- ✓ **BE CAREFUL IN AND AROUND THE CONVEYOR(S) DURING INSTALLATION. ALSO, BE AWARE OF OTHERS IN THE AREA.**
- ✓ **ONLY ALLOW QUALIFIED PERSONNEL TO ASSEMBLE AND INSTALL CONVEYORS.**

FRAME ASSEMBLY

If the frame and belt have been shipped "knocked down" use the following information to aid in assembly.

1. If the conveyor is not to be put into use immediately, oil the belt liberally and store along with the frame in a dry location.

2. Layout a line on the floor to represent the centerline of the conveyor. As frame sections are bolted together make sure they remain centered on the line.

3. Bolt together conveyor frames finger tight with the fasteners provided. Make sure that the tracks, which the belt rides on, are lined up and level to ensure a smooth transition from one section to the next.
   (Weld tracks and grind smooth for best results.)

NOTE: If several sections of frame are to be joined in a particular sequence, they will be factory matched marked. See *FIGURE 1*.

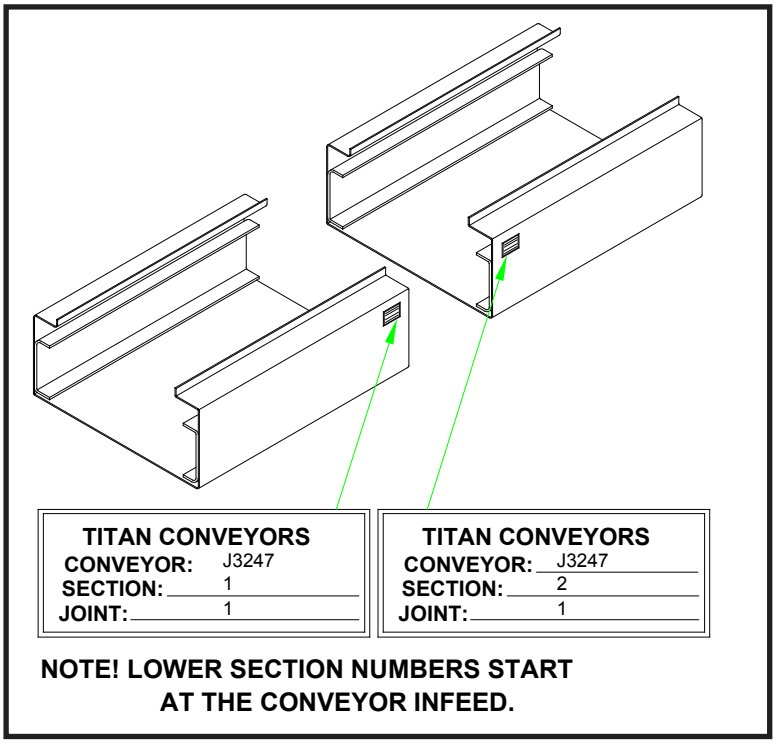

FIGURE 1

SUPPORT ASSEMBLY

Standard heavy duty supports are always shipped assembled. See **FIGURE 2** for component breakdown.

CAUTION ***IT IS THE CUSTOMERS RESPONSIBILITY*** **TO LAG THE SUPPORTS TO THE FLOOR AFTER THE FOLLOWING INSTALLATION PROCEDURES HAVE BEEN MET.**

1. If supports have been provided bolt them to the frame. Generally there are tapped pads welded to frame sections for the supports to bolt up to. See ***FIGURE 2***.

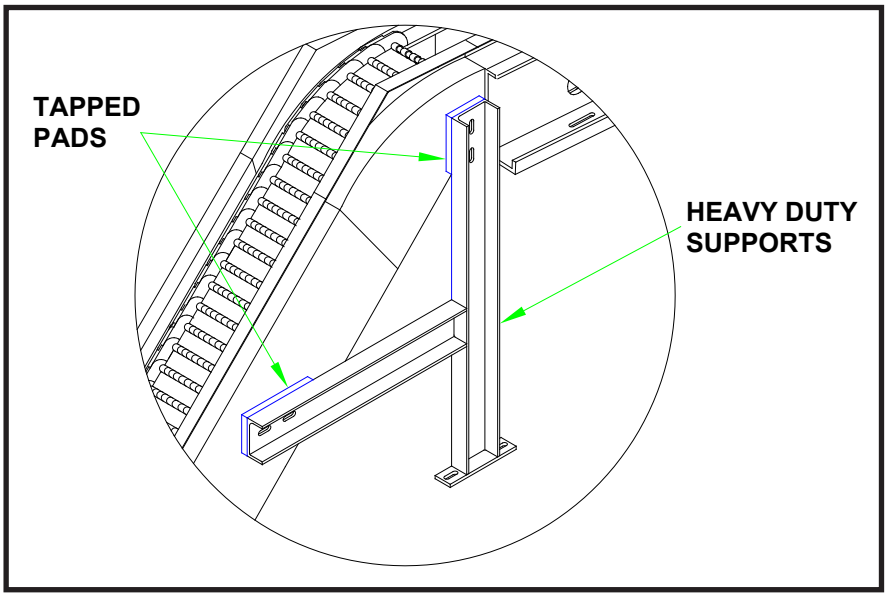

FIGURE 2

BELT CHECKLIST - READ BEFORE INSTALLING BELT

✓ **SPROCKETS**

Make sure that the belt drive sprockets are securely fastened to the drive shaft. Also make sure that the sprockets are the correct distance apart for proper engagement with the belt rollers.

Check that the sprockets are in axial alignment so that the sprocket teeth engage the rollers on either side of the belt at the same time.

✓ **FRAME**

Check that the frame is free of any protrusions, like welds, which may keep the belt from running into the frame smoothly.

Look for, and remove, any foreign objects (nuts, bolts, tools, etc.) from the frame and tracks.

BELT INSTALLATION

to View the Instructional Videos

"Installing a Hinged Steel Belt Conveyor"
https://youtu.be/HliE9lGVIBM

"Setting Tension on a Hinged Steel Belt"
https://youtu.be/7Za3vqVwjvE

The installation description below describes the installation of 2 1/2" pitch hinged steel belting. On installations of larger pitch belts, (4" pitch or 6" pitch) it is common to feed the belt, if room allows, onto the top (carrying) track at the infeed.

1. Prior to installing the belt, adjust the drive shaft (and infeed shaft if adjustable) toward the center of the conveyor. See ***FIGURE 3***. Check to make sure the drive and infeed shafts are parallel to each other.

2. Attach an angle or bar across the bottom of the discharge. See ***FIGURE 3***. This provides a rest and guide for the belt during installation.

   NOTE: If the belt is fed in by hand, you must disconnect the drive chain so the belt sprockets will rotate freely.

FIGURE 3

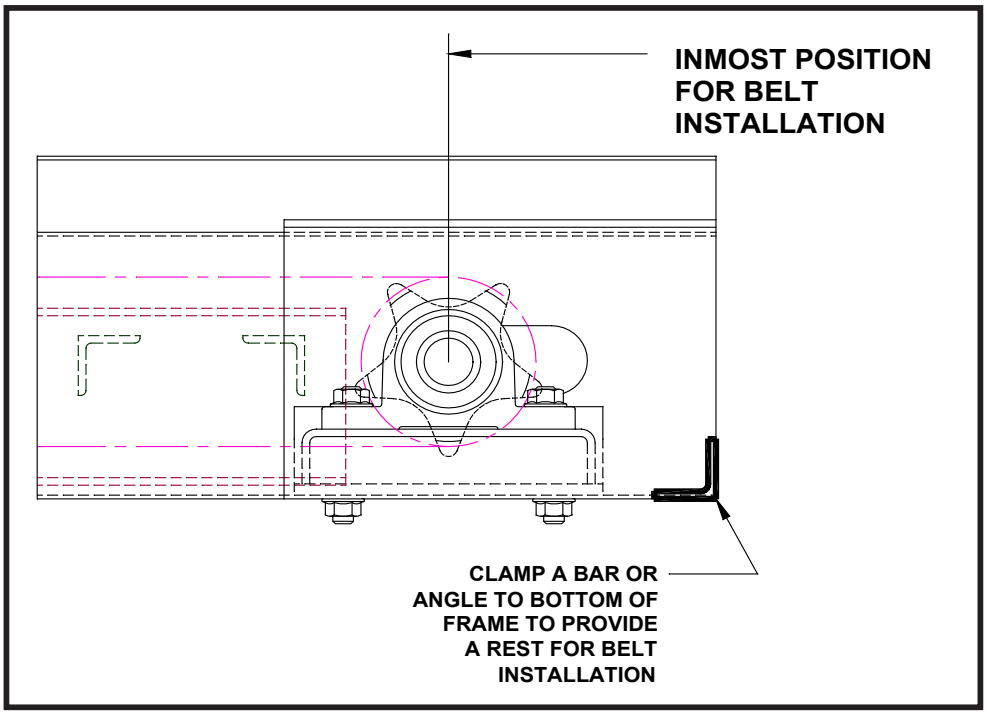

3. Feed the belt upside down into the return track. See ***FIGURE 4***. If your belt was shipped in more than one section leave, a length of belt outside the frame to allow for connection of the next section of belt.

4. When the belt is fed around the infeed sprockets, make sure the belt rollers remain tight against the sprocket teeth as feeding continues onto the top track.

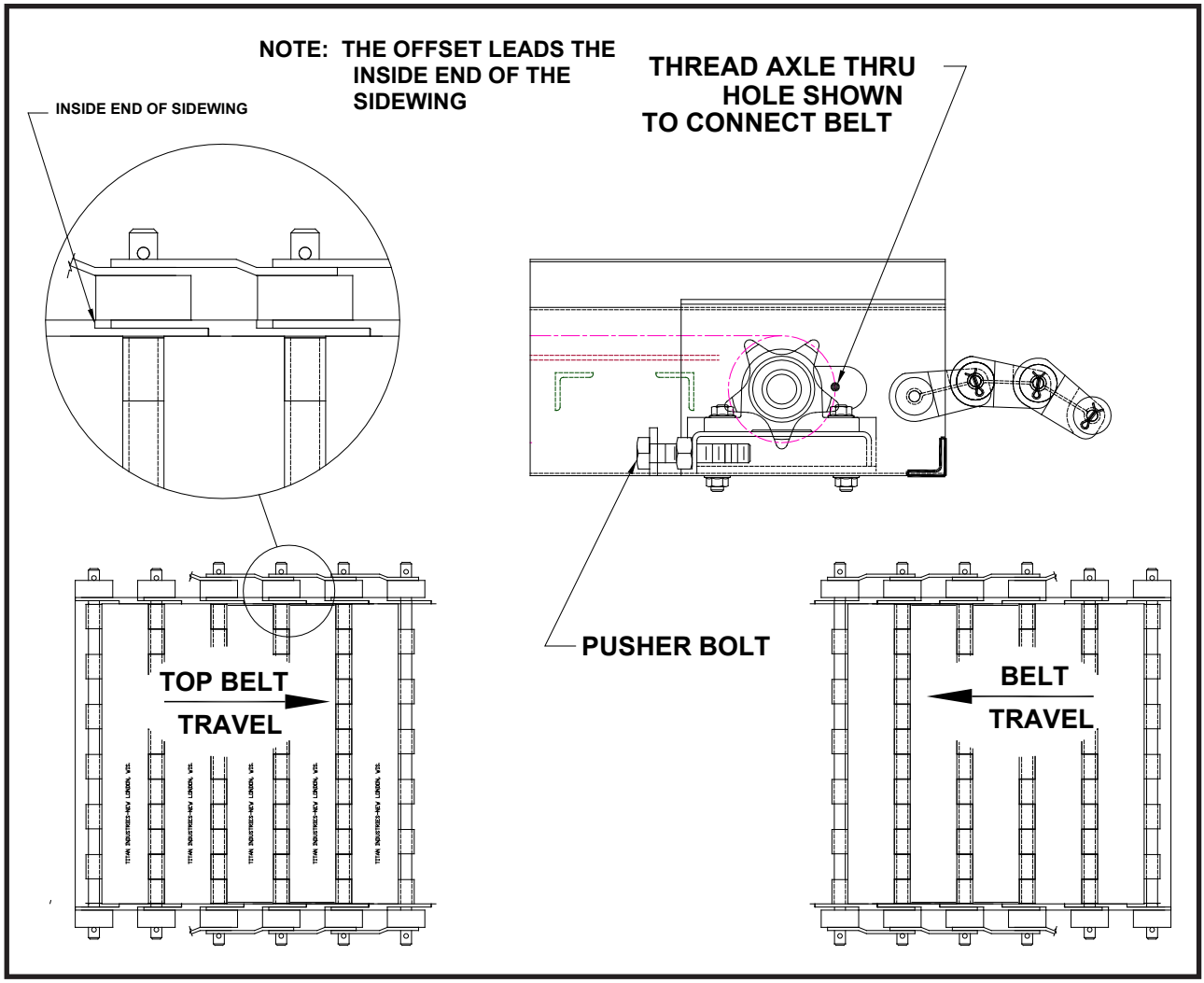

FIGURE 4

NOTE: Once the belt is threaded around the infeed sprockets, the aid of a hand winch will make pulling the belt up to the discharge much easier.

5. For final connection thread an axle thru the hole provided in the head plate to join the interlocking belt ends. See ***FIGURE 4***

6. By using the take-up provided remove excess slack in the belt. Take up each side equally so the belt tracks properly.

COMPONENT CHECKLIST

Prior to start up use the following list to double check the conveyor components.

✓	**MOTOR**	Have a qualified electrician ensure the motor is wired correctly for your power source. Check that motor is securely fastened to the reducer or motorbase.
✓	**REDUCER**	Check that the proper amount of oil is in the reducer.* ***Make sure a vent plug is installed on the reducer.**** (A solid plug is usually installed for shipping.)
✓	**BEARINGS**	Double check that bearings are fastened securely. Be sure that locking collars are tightened and set screws are screwed in firmly to the shaft.
✓	**GENERAL**	Check that sprockets with chain and/or sheaves with v-belt are aligned and properly tensioned.*

Additional information available in Maintenance section.

START UP

1. With no load on the belt, jog the belt until it makes a complete revolution. This will ensure that there are no obstructions.

2. Run the belt for several hours before placing the conveyor into production. During this time watch how thebelt is tracking. If the belt is running off to one side, loosen the bearing (on the drive end), on that side and with the pusher bolt provided (See ***FIGURE 4***) move the driveplate out slightly. This will force the belt towards the opposite side. When the belt is tracking properly, tighten down the bearing and lock the pusher bolt in place with the locking nut provided.

CAUTION **CHECK AT LEAST WEEKLY FOR PROPER TRACKING.**

NOTE: Wear marks on the outside surface of the belt sidewings indicate the belt is tracking incorrectly.

3. As the belt is running observe the cotter pins on either side. Make certain they are all spread properly.

TORQUE LIMITER

Torque limiters are often provided to give protection against overloading or jamming. If the belt is factory installed, the torque limiter is set to allow the belt to run freely without torque limiter slippage occurring (This may not be sufficient for the loads to be carried). If slippage of the torque limiter occurs, See the separate Torque Limiter Instructions sent with your conveyor for further instructions

CAUTION **SEE THE TORQUE LIMITER INSTRUCTIONS THAT CAME WITH THE CONVEYOR FOR ADJUSTMENT/REPLACEMENTINSTRUCTIONS AND PARTS LISTS.**

MAINTENANCE

BELT CARE

1. **LUBRICATION** - Periodically oil the hinged steel belt to keep the belt components moving freely andreduce belt drag. This will minimize wear on the belt and drive components and is especially important if the belt is operating in wet conditions.

2. **BELT TENSION** - Check for proper belt tension at least monthly or after any jamming. Use the following information as a guide for tension.

- **Too tight of a belt will usually pulsate as it moves through the frame. Another indication that a belt is too tight is when there is an above normal ampere draw. Excessive tension causes increased wear and reduced belt life.**

- **Too loose of a belt buckles as it leaves the infeed sprockets and as it contacts the drive sprockets. This condition often causes jamming and can easily damage the belt.**

MOTORS

1. **CLEANING** - All motors should be kept free of dirt and grease accumulations. Open motors should be periodically vacuumed to remove dust and dirt fromthe windings.

2. **VENTILATION** - For best results motors should be operated in an area where adequate ventilation is available.

3. **TEMPERATURE** - Most of todays smooth body T.E.N.V. and T.E.F.C. motors run hot to the touch. As long as maximum ambient temperatures are not exceeded, and more importantly, ampere draw is within the allowable range, there should be no need to worry. (Both of these limits are found on the motor nameplate.)

4. **LUBRICATION** - Most electric motors are lubricated for life and under normal conditions require no more lubrication. Under severe conditions where additional lubrication is required, use the following chart as a guide.

CAUTION

The following chart is based on motors with grease lubricated bearings, running at speeds of 1750 R.P.M. or less, and operating within an ambient temperature range of between 0 degrees F. to 120 degrees F.

CONDITION	LUBRICATING FREQUENCY
Normal 8 hr. day Light Loads	2 to 3 years
Heavy 24 hr. Day Heavy Loads Dirty Conditions	1 Year
Extreme Shock Loads High Temperatures	3 to 6 Months

Typical lubricants that can be used:

Chevron Oil Co. - SRI #2
Shell Oil Co. - Alvania #2, Dolium R
Texaco Inc. - Premium RB
Gulf Refining Co. - Precision #2 or #3
Mobile Oil Co. - Mobilux Grease #2
Sinclair Refining Co. - A.F. #2

REDUCERS

The following reducer information is concerned primarily with worm gear reducers. If your conveyor is equipped with another type, refer to the manufacturer's recommendations for installation and maintenance sent along at time of shipment.

1. **ASSEMBLE / DISASSEMBLE MOTOR TO REDUCER** - Because many of today's motor keyways are cut with a sidemill cutter, the following assembly instructions should be followed to insure a trouble-free fit between motor and reducer. First, place the key into the reducer keyway. Second, line up the motor keyseat with the key and push the motor shaft into the reducer bore. Third, finish assembly by bolting themotor to the reducer flange. This insures that the key does not slide back in the motor keyseat. See ***FIGURE 5***.

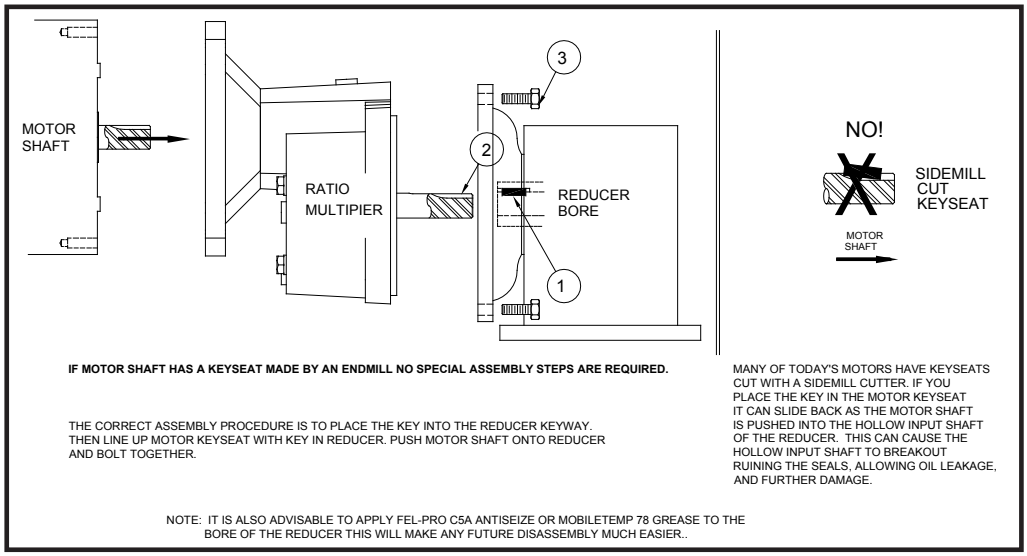

FIGURE 5

2. **VENTILATION** - During normal operation gear reducers build up heat and pressure that **MUST** be vented to protect the seals and gears. If not installed at Titan, a brass vent plug contained in a small plastic bag, will be put in a box or larger bag along with fasteners sent loose for use during field installation. Remove thetop most drain plug (refer to ***FIGURE 6*** for the position of your reducer) and install the vent plug securely in place.

3. CLEANING - After approximately two to three weeks of operation the reducer **MUST** be drained, flushed out, and refilled to the proper level with fresh oil. (This is done to remove brass particles caused during thenormal wear-in period of the worm gear.) Afterwards, the oil should be changed in your reducer every 2500 hours or every 6 months, which ever occurs first.

CAUTION

Where high temperatures and/or dirty atmosphere exists more frequent changes may be necessary. Periodically check reducer to ensure that the proper level of oil is in the reducer. Too little oil will cause accelerated wear on the gears. Too much oil can cause overheating, seal deterioration, and leakage.

Standard Gear Reducer Mounting Positions & Vent Plug, Level and Drain Locations

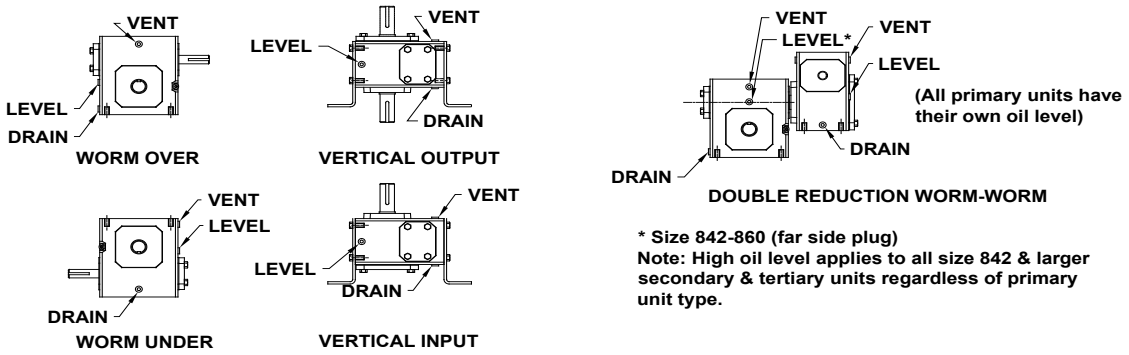

*** Size 842-860 (far side plug)**
Note: High oil level applies to all size 842 & larger secondary & tertiary units regardless of primary unit type.

Oil Capacities (ounces) - Standard Units

Mounting Position	UNIT SIZE													
	813	815	818	821	824	826	830	832	842	852	860	870*	880*	8100*
1 - Worm Over	4	12	12	20	24	40	56	72	112	188	312	35	48	72
2 - Worm Under	8	16	20	28	40	60	84	108	152	304	328	32-3/4	51-1/4	80

16 0z. = 1 pint
2 pints = 1 quart
4 quarts = 1 gallon
1 gallon = 128 oz. = 231 Cu. in.

FIGURE 6

4. **LUBRICATION** - The precision - made gears and bearings in our reducers require high-grade lubricants of the proper viscosity to maintain trouble- free performance. All standard reducers ordered from the factory are filled with ISO viscosity grade **Mobil Glygoyle 460 polyalkalene glycol (PAG)** lubricant. If oil needs tobe added or changed, ONLY compatible polyglycol lubricants should be used. Contact the factory for more information.

5. **TEMPERATURE** - Most Titan units are supplied with worm gear reducers. These units may run at temperatures between 100 degrees to 200 degrees F. (Higher temperatures are especially common during start up). There is NO NEED TO WORRY unless temperatures exceed 200 degrees F.

6. **GENERAL** - Inspect weekly to make sure reducer remains securely bolted.

CHAIN & SPROCKETS

For longest chain life a constant film of oil is recommended. We recommend a good quality non-detergent petroleum base oil. Use the chart below.

WARNING **SHUT OFF CONVEYOR BEFORE REMOVING GUARDS TO APPLY OIL.**

TEMPERATURE	RECOMMENDED OIL VISCOSITY
20 degrees - 40 degrees F	SAE 20
40 degrees - 100 degrees F	SAE 30
100 degrees - 120 degrees F	SAE 40
120 degrees - 140 degrees F	SAE 50

DANGER **REMEMBER - ALL GUARDS AND BOTTOM PANS, IF PROVIDED, MUST BE REPLACED BEFORE RUNNING CONVEYOR. TITAN INDUSTRIES IS NOT RESPONSIBLE FOR INJURIES CAUSED BY NOT COMPLYING WITH SAFETY INSTRUCTIONS.**

BEARINGS

1. **LUBRICATION** - Bearings used on Titan conveyors are normally pre-lubed for life. If a customer requested re-lube bearings be provided, the use of a #2 consistency lithium based grease is advised.

   Greasing frequency should be as many times as necessary to maintain a small film of grease leaking at the seals. This will protect against foreign materials entering the bearing. The following list is provided to aid you in acquiring the proper grease or an equivalent.

NORMAL DUTY	HEAVY DUTY
Texaco - Multifak #2	Sun - Prestige 742EP
Mobile - Mobilux #2	Exxon - Lidok #2EP
Amoco - Lithium MP	Arco - Litholene HEP2
Shell - Alvania #2	Shell - Alvania #2EP

2. **REPLACEMENT** - If replacement of bearings become necessary remember to clean off the shaft, file smooth any grooves or set screw marks, and oil the shaft before slipping on the new bearing.

CAUTION **IF BEARING DOES NOT SLIDE ON EASILY, USE A SOFT METAL BAR TO TAP AGAINST THE INNER RACE TO ASSEMBLE.**

3. **GENERAL** - Set up a weekly check on all bearings to ensure they remain tightly bolted down, set screws remain fastened securely, and are properly lubricated.

V-BELT & SHEAVES

If provided on your drive package, v-belt tension & sheave alignment are important for extended belt life. Read the following list for proper maintenance or installation.

1. Never pound sheaves on or off a shaft. Make sure that the shaft diameter and sheave bore are properly sized. If there are burrs caused by set screws or sharp edges on the keyway or keyseat, remove carefully with emery cloth and/or file. Clean off metal particles and dirt from the shaft and sheave before installation.

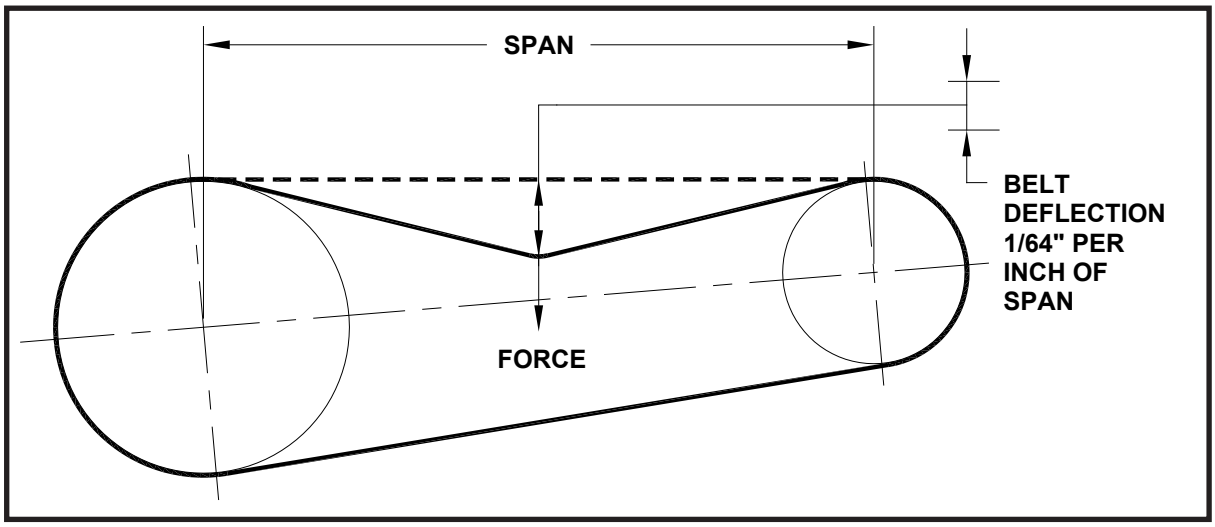

FIGURE 11

2. Sheaves must be in line with each other and installed on shafts which are parallel with each other.

3. **DO NOT FORCE** or use the drive to install a v-belt. Have driven components loose to install the belt(s).

4. With available take-up tighten belts enough to keep from slipping during operation. Ideal belt tension is the lowest tension at which the belt will not slip under peak load conditions. The drive side of the belt(s) should be straight across and the slack side should show a slight bow.

5. Do not place new belt(s) on worn sheaves.

6. If multiple belts are used, replace all belts with a new set of matched belts.

7. Do not use belt dressing on belt(s) which are slipping. Belt dressing will damage the belt and cause early failure. Tighten belt(s) to proper tension, or if dirty, clean the belt(s) with a commercial rubber solvent.

DANGER **CHECK V-BELTS AND SHEAVES ONLY WHEN CONVEYOR IS STOPPED!**

MODEL 640
HINGED STEEL BELT CONVEYOR

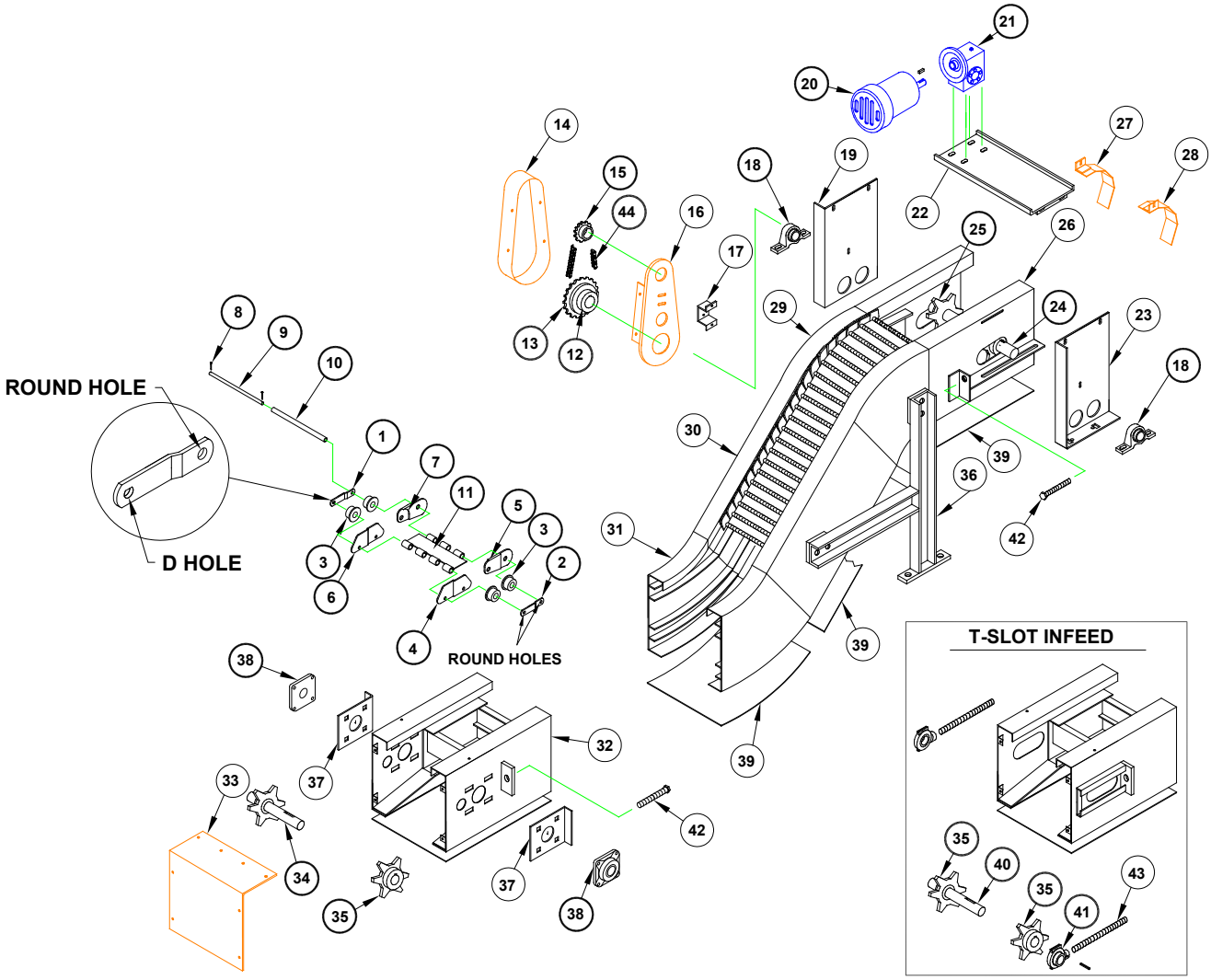

1. ● **OUTSIDE SIDEBAR (D-HOLE)**
2. ● **OUTSIDE SIDEBAR (ROUND HOLE)**
3. ● **2" DIA. SINGLE FLANGE ROLLER**
4. ● **SIDEWING-R/H (OLD STYLE)**
5. ● **SIDEWING-R/H (NEW STYLE)**
6. ● **SIDEWING L/H (OLD STYLE)**
7. ● **SIDEWING L/H (NEW STYLE)**
8. ● **COTTER PIN**
9. ● **AXLE**
10. ● **SPANNER TUBE**
11. ● **HINGE PLATE**
12. ● **TORQUE LIMITER**
13. ● **DRIVEN SPROCKET**
14. DRIVE GUARD
15. ● **DRIVE SPROCKET**
16. GUARD BACK
17. GUARD BRACKET
18. ● **DRIVE BEARING**
19. DRIVEPLATE L/H
20. ● **MOTOR**
21. ● **REDUCER**
22. MOTORBASE
23. DRIVEPLATE R/H
24. ● **DRIVESHAFT**
25. ● **BELT DRIVE SPROCKET**
26. DRIVE FRAME
27. SPROCKET GUARD L/H
28. SPROCKET GUARD R/H
29. UPPER CURVE
30. INCLINE FRAME
31. LOWER CURVE
32. INFEED FRAME
33. INFEED GUARD
34. ● **INFEED SHAFT**
35. ● **INFEED SPROCKET**
36. SUPPORT
37. BEARING PUSHER BRACKET
38. ● **INFEED BEARING**
39. BOTTOM PANS
40. INFEED SHAFT (T-SLOT BRG)
41. T-SLOT BEARING
42. PUSHER BOLT
43. THREADED SHAFT
44. ● **ROLLER CHAIN**

● **RECOMMENDED SPARE PARTS TO BE STOCKED AT YOUR LOCATION**