TITAN™ CONVEYORS

Industrial Conveyor Specialists

Installation, Maintenance & Parts Manual
For

MODEL 208
Floor to Floor
Slider Bed Conveyor

For Additional copies of this manual, please visit our website at
www.titanconveyors.com
Go to Info Center, Select the Maintenance Manual Tab
and select the manual for your model conveyor
or click on the link below.
https://www.titanconveyors.com/info-center#823236-maintenance-manuals

Titan Conveyors
735 Industrial Loop Road
New London, WI 54961
920-982-6600
800-558-3616
FAX 920-982-7750
E-mail: sales@titanconveyors.com
Website: www.titanconveyors.com

Serial No.

Go to Table of Contents

TITAN MODEL 208 MANUAL

Table of Contents

Page 2 .....Table of Contents/Warranty
Page 3 .....Safety/Safety Decals
Page 4 ..... Introduction
I. Receiving
II. Installation
Support Assembly
Page 5 ..... Frame Assembly
Page 6 .....Component Checklist
Belt Installation
Page 7 .....Belt Threading Chart
Page 8 ..... III. Maintenance
Belt Tracking
Page 9 .....Motors
Page 10 .....Reducers
Page 11 .....Bearings
Page 12 .....V-Belt & Sheaves
Page 13 ..... Chain & Sprockets
Page 14 .....Model 208 Blow Apart Drawing
Page 15 .....Model 208 Center Drive & Take-up Blow Apart Drawing
Page 16 ..... Model 208 Power Feeder Blow Apart Drawing

Warranty

(A) Seller warrants that the material in and the workmanship on the equipment manufactured by TITAN will be free from defects at time of shipment. If during the first year from the date of shipment, the Buyer establishes to the seller's satisfaction that any part or parts manufactured by TITAN were defective at the time of shipment, TITAN will, at its own expense, repair or replace (but not install) replacement parts. For a time purpose of this warranty, one year will constitute 2080 hours of operation based on an 8 hour day. Sellers liability under this warranty is limited to replacement parts only and the seller will make no allowance for corrective work done unless agreed to by the seller in writing. Charges for correction of defects by others will not be acceptable, unless so authorized in writing, prior to the work being performed, by an officer of the company. Damage caused by deterioration due to extraordinary wear and tear (including, but not in limitation, use said equipment to handle products of a size, weight and shape or at speeds or methods which differ from information originally provided), chemical action, wear caused by the presence of abrasive materials or by improper maintenance or lubrication or improper storage prior to installation, shall not constitute defects. Failure to install equipment properly shall not constitute defects. Warranty does not cover consumable items. Warranty does not cover belt tracking or adjustment at installation or periodic adjustment that may be required during normal operation. Refer to the maintenance manual for belt tracking instructions.

(B) Seller has made no representation, warranties, or guarantees, expressed or implied, not expressly set forth on above paragraph. Seller shall not be liable hereunder for any consequential damages included but not in limitation, damages which may arise from loss of anticipated profits or production or from increased cost of operation or spoilage of material.

(C) The components used in manufacture of said equipment which were manufactured by others will carry such manufacturers' customary warranty, which seller will obtain for buyer upon request.

(D) No representative of TITAN has been conferred with any authority to waive, alter, vary or add to the terms of warranty state herein, without prior authorization in writing executed by an officer of the company.

(E) The foregoing is in lieu of any and all other warranties, expressed or implied, or those extending beyond the description of the product.

Safety

The Safety alert symbol is used with the signal words

⚠ DANGER, ⚠ WARNING and ⚠ CAUTION to alert you to safety messages.

They are used in safety decals on the unit and with proper operation and procedures in this manual. They alert you to the existence and relative degree of hazards.

Understand the safety message. It contains important information about personal safety on or near the conveyor.

DANGER — **POTENTIALLY HAZARDOUS SITUATION** which if not avoided, could result in death or serious injury.

WARNING — **POTENTIALLY HAZARDOUS SITUATION** which if not avoided, may result in minor or moderate injury. It may also be used to alert against unsafe practices.

CAUTION — **POTENTIALLY DESTRUCTIVE SITUATION** which if not avoided, may result in damage or reduce the longevity of the equipment.

Safety Decals

ALWAYS replace missing or damaged Safety Decals.

Operational Safety

Keep Hands, feet, hair and loose clothing **away** when conveyor is running

NEVER climb, sit, walk or ride on conveyor

ALWAYS lock out power before servicing to avoid electrical shock.

ALWAYS keep hair and loose clothing away.

ALWAYS keep hands away from conveyor while moving.

Never run conveyor without guards in place.

INTRODUCTION

The management and employees of Titan Industries thank you for specifying Titan equipment. This manual will give you the basic information to install and maintain your equipment. If special circumstances or questions come up call Titan at 920-982-6600.

I. RECEIVING

Upon delivery of your Titan conveyor, check the packing slip or bill of lading accompanying the unit. If any components are missing, contact Titan IMMEDIATELY with a description of the missing components along with the conveyor serial number(s). The serial number is found on the serial plate normally positioned by the drive.

Check the unit(s) over carefully upon arrival for damage. If you find any damage note it on the bill of lading. ***YOU MUST*** also file a claim ***IMMEDIATELY*** with the carrier.

II. INSTALLATION

- ✓ **WEAR SAFETY GLASSES, SAFETY SHOES, AND GLOVES.**
- ✓ **HAVE AREA AROUND INSTALLATION SITE CLEARED OF DEBRIS.**
- ✓ **LOCKOUT POWER TO CONVEYOR(S) UNTIL START-UP.**
- ✓ **LOOK OUT FOR SHARP EDGES WHILE HANDLING CONVEYOR COMPONENTS.**
- ✓ **BE CAREFUL IN AND AROUND THE CONVEYOR(S) DURING INSTALLATION. ALSO, BE AWARE OF OTHERS IN THE AREA.**
- ✓ **ONLY ALLOW QUALIFIED PERSONNEL TO ASSEMBLE AND INSTALL CONVEYORS.**

SUPPORT ASSEMBLY

Standard supports are always shipped assembled. See ***FIGURE 1*** for a component breakdown.

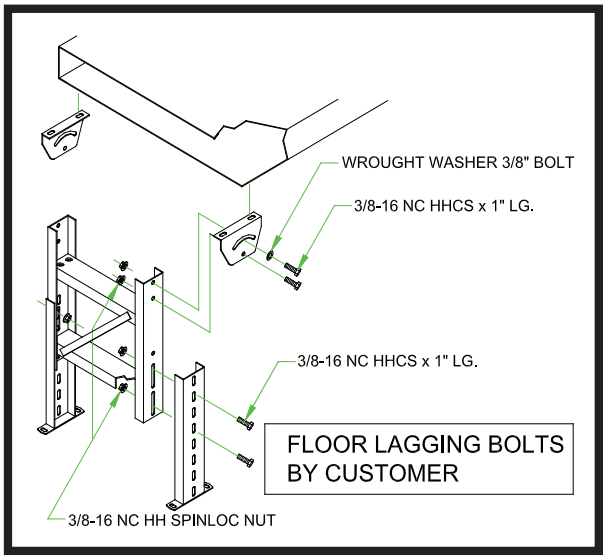

FIGURE 1

WARNING

IN ORDER FOR THE CONVEYOR TO BE STABLE, THE SUPPORTS MUST BE LAGGED TO THE FLOOR OR SUPPORT STRUCTURE.
THIS IS THE CUSTOMER RESPONSIBILITY!!

FRAME ASSEMBLY

1. To start, along side the area where the conveyor is to be installed, layout the frame sections in their proper position according to the ordered description or refer to your copy of the approval drawing.

   NOTE: If several sections of frame are to be joined in a particular sequence, they will be factory matched marked. See *FIGURE 2.*

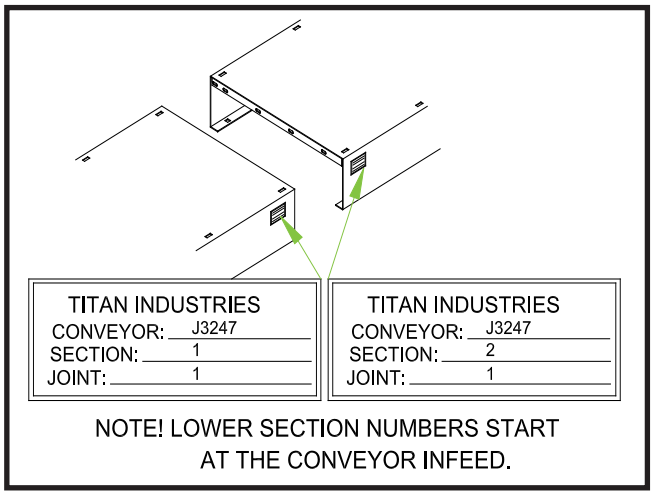

FIGURE 2

2. Layout a line on the floor to represent the centerline of the conveyor. As frame sections are bolted together make sure the frame remains centered on the line.

3. Generally, if there are short sections (1', 2' or 4'), position them adjacent to the drive section.

4. If a center take-up or center drive and take-up section has been provided, position the section as close to the center of the conveyor as possible.

5. Bolt together conveyor frames finger tight. Square frames and make sure all frames line up with adjacent section before securing all bolts. See ***FIGURE 3***.

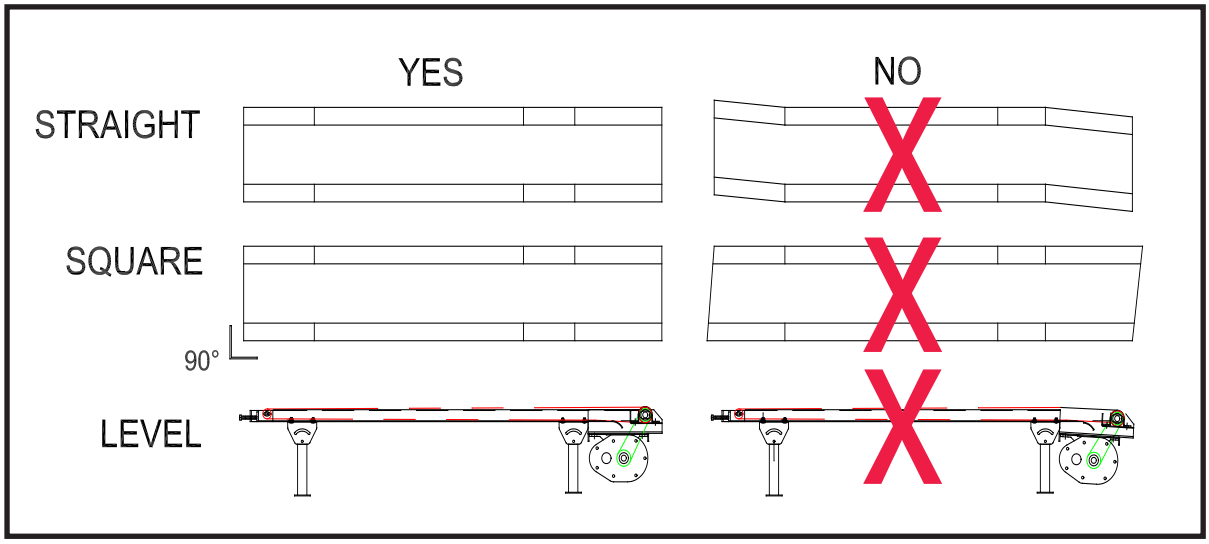

FIGURE 3

COMPONENT CHECKLIST

Prior to start up use the following list to double check the conveyor components.

- ✓ **MOTOR** — Have a qualified electrician ensure the motor is wired correctly for your power source. Check that motor is securely fastened to the reducer or motorbase.
- ✓ **REDUCER** — Check that the proper amount of oil is in the reducer.* ***Make sure a vent plug is installed on the reducer.**** (A solid plug is usually installed for shipping.)See ***FIGURE 10.***
- ✓ **BEARINGS** — Double check that bearings are fastened securely. Be sure that locking collars are tightened and set screws are secured firmly to the shaft.
- ✓ **GENERAL** — Check that sprockets with chain and/or sheaves with V-belt are aligned and properly tensioned.*

Additional information available in section III Maintenance.

BELT INSTALLATION

1. Locate all take-up pulleys to their minimum take-up positions to allow for easy belt installation.

2. As a double check, lay out belt on a level surface and pull tight. The belt should lay flat and be in a straight line. See ***FIGURE 4***. At this time recheck belt ends to ensure that they were cut squarely and that the lacing was installed properly.

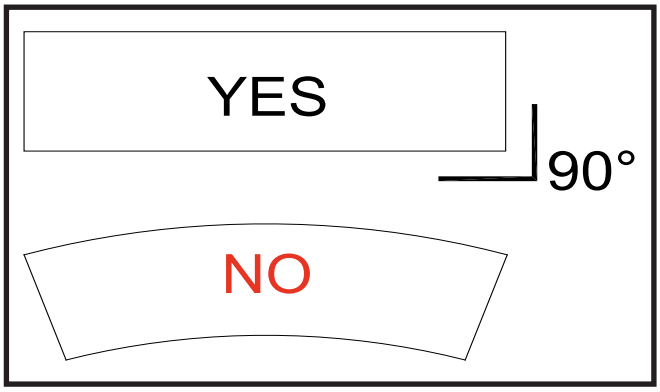

FIGURE 4

3. With typical belt threading arrangement shown on page 8 ***FIGURE 6*** of this manual, install the belt on the conveyor. Interlock the laced ends squarely, and push the connector pin thru the lacing. If a metal connector pin is used, center the pin and bend the ends over slightly to keep the pin from working out. See ***FIGURE 5***

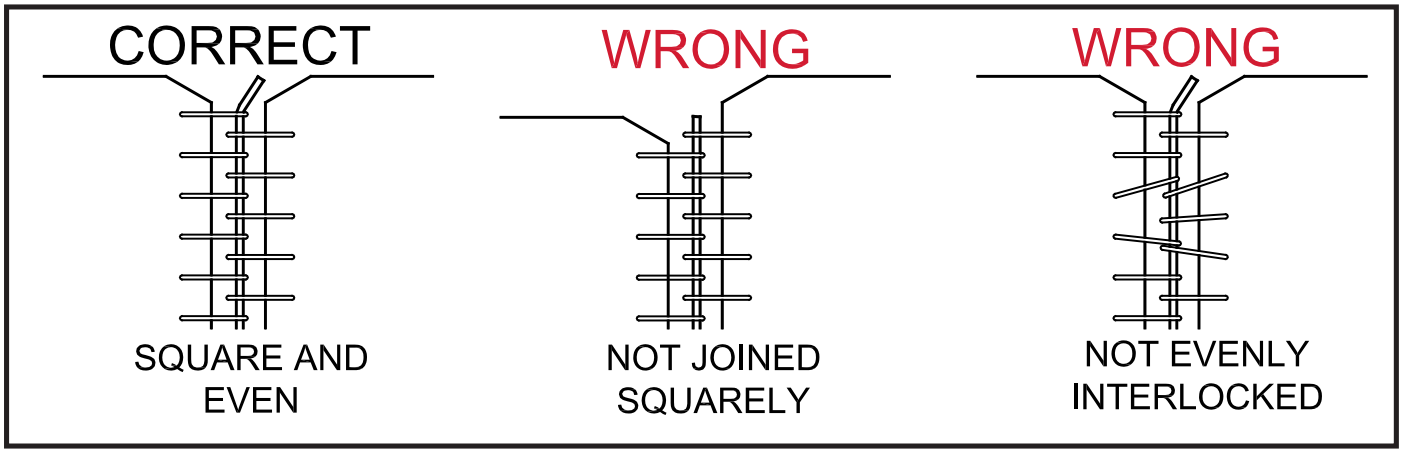

FIGURE 5

Belt Threading

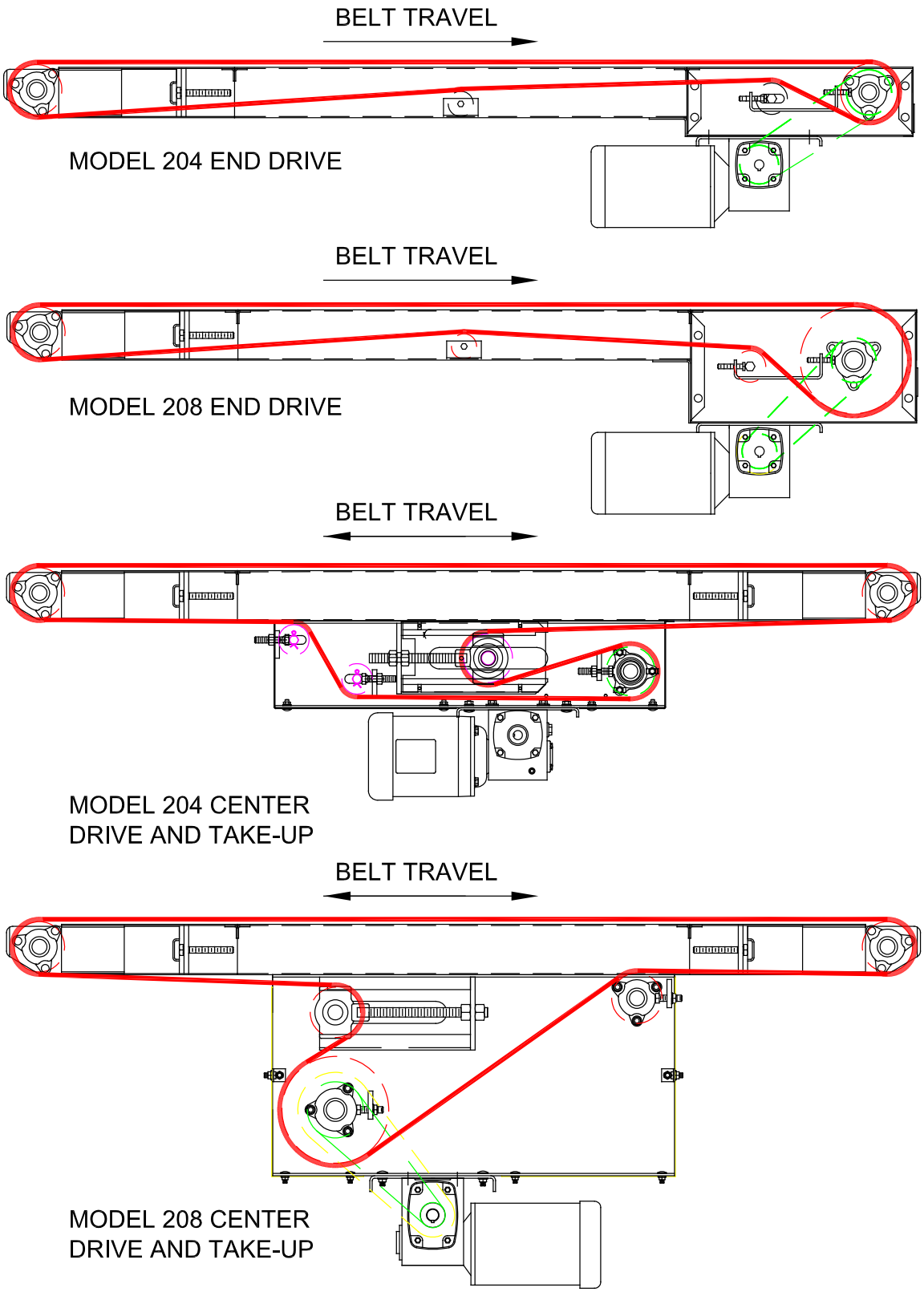

FIGURE 6

4. After making sure the conveyor is cleared off and the drive pulley is moving the belt in the correct direction, run the conveyor. Take up slack belt with the take-up provided until there is no slippage between the drive pulley and the belt.

CAUTION

A GENERAL RULE FOR CORRECT BELT TENSION IS THAT THE BELT MUST BE TIGHT ENOUGH TO MOVE YOUR PRODUCT AT FULL LOAD. OVERTIGHTENING OF THE BELT WILL CAUSE THE BELT, PULLEYS, BEARINGS, AND DRIVE COMPONENTS TO WEAR OUT PREMATURELY.

III. MAINTENANCE

BELT TRACKING - to see the instructional video on YouTube

www.youtube.com/watch?v=4O5YSukH9as

1. The first step in belt tracking is to make sure all pulleys are parallel with each other and perpendicular to the frame. Once this has been done refer to ***FIGURE 7*** for proper tracking adjustments on end drive conveyors or ***FIGURE 8*** for proper tracking on center drive and take-up conveyors.

CAUTION

IN REF. TO LEFT HAND AND RIGHT HAND SIDES, WE AT TITAN INDUSTRIES ALWAYS POSITION OURSELF STANDING AT THE INFEED, LOOKING AT THE DRIVE END TO DETERMINE RIGHT HAND VS LEFT HAND

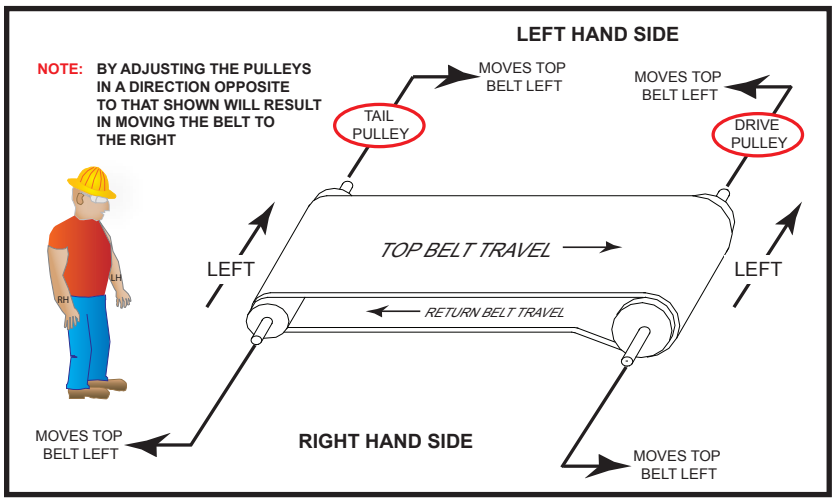

FIGURE 7

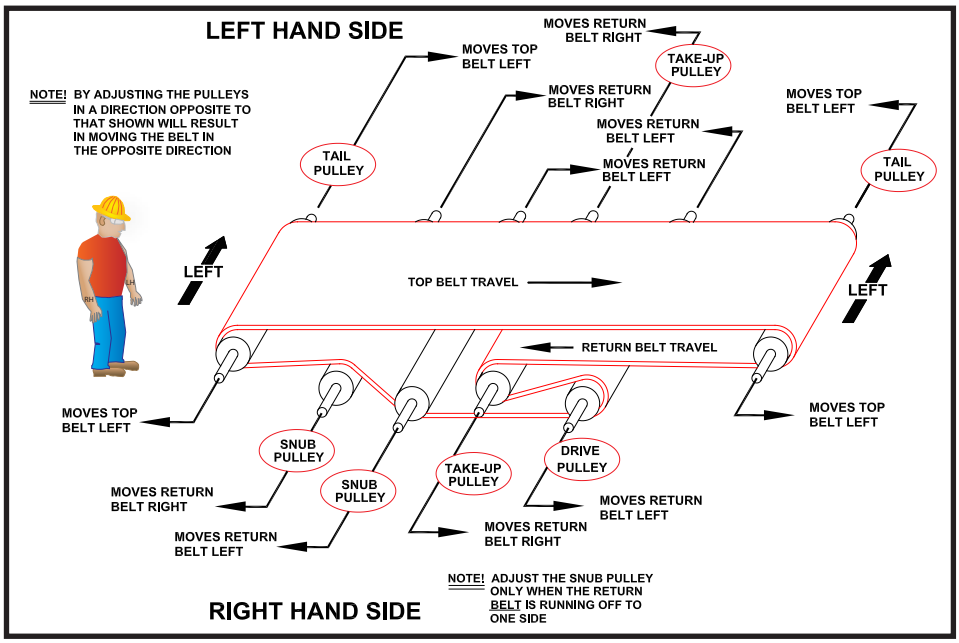

FIGURE 8

2. With the conveyor running, make pulley, snub roller, or return roller adjustments of 1/16 of an inch, allowing the belt several revolutions to react between each adjustment.

CAUTION

NOTE: IN MANY CASES, ADJUSTMENTS OF THE SNUB PULLEY AND RETURN ROLLER ARE SUFFICIENT TO CENTER THE BELT OVER THE DRIVE PULLEY AND TAIL PULLEY

3. After the belt has been tracked **WATCH IT CLOSELY** for a few days making any additional adjustments required during this initial stretch-in period.

4. On longer units a short section of laced belt called a “Dutchman” is added to the overall length of the belt. As the belt is taken up the “Dutchman” can be removed to allow the conveyor take-up additional adjustment.

5. Make sure maintenance personnel look over the conveyor belt at least weekly and check on the following:

- ✓ Belt is tracking properly and is not slipping on drive pulley.
- ✓ Pulleys, rollers, deck, etc. are free from foreign material that could fall in or stick to the belt and cause damage.
- ✓ Belt is not being frayed or cut by siderails, chutes, hoppers, etc.
- ✓ That belt lacing is not being damaged and belt connector pin is staying in the lacing.

MOTORS

1. **CLEANING** - All motors should be kept free of dirt and grease accumulations. Open motors should be periodically vacuumed to remove dust and dirt from the windings.

2. **VENTILATION** - For best results motors should be operated in an area where adequate ventilation is available.

3. **TEMPERATURE** - Most of todays smooth body T.E.N.V. and T.E.F.C. Motors run hot to the touch. As long as maximum ambient temperatures are not exceeded, and more importantly, ampere draw is within the allowable range, there should be no need to worry. (Both of these limits are found on the motor nameplate.)

4. **LUBRICATION** - Most electric motors are lubricated for life and under normal conditions require no more lubrication. Under severe conditions where additional lubrication is required, use the following chart as a guide.

CAUTION

THE FOLLOWING CHART IS BASED ON MOTORS WITH GREASE LUBRICATED BEARINGS, RUNNING AT SPEEDS OF 1750 R.P.M. OR LESS, AND OPERATING WITHIN AN AMBIENT TEMPERATURE RANGE OF BETWEEN 0 DEGREES F. TO 120 DEGREES F.

CONDITION	LUBRICATING FREQUENCY
Normal 8 hr. day Light Loads	2 to 3 years
Heavy 24 hr. Day Heavy Loads Dirty Conditions	1 Year
Extreme Shock Loads High Temperatures	3 to 6 Months

Typical lubricants that can be used:

Chevron Oil Co. - SRI#2
Shell Oil Co. - Alvania #2, Dolium R
Texaco Inc. - Premium RB
Gulf Refining Co. - Precision #2 or #3
Mobile Oil Co. - Mobilux Grease #2
Sinclair Refining Co. - A.F.#2

REDUCERS

The following reducer information is concerned primarily with wormgear reducers. If your conveyor is equipped with another type, refer to the manufacturer's recommendations for installation and maintenance sent along at time of shipment.

1. ASSEMBLE / DISASSEMBLE MOTOR TO REDUCER & RATIO MULTIPLIER (IF USED) - Because many of today's motor keyways are cut with a sidemill cutter, the following assembly instructions should be followed to insure a trouble-free fit between motor and reducer. First, place the key into the reducer keyway. Second, line up the motor keyseat with the key and push the motor shaft into the reducer bore. Third, finish assembly be bolting the motor to the reducer flange. This procedure should insure that the key does not slide back in the motor keyseat. See ***FIGURE 9.***

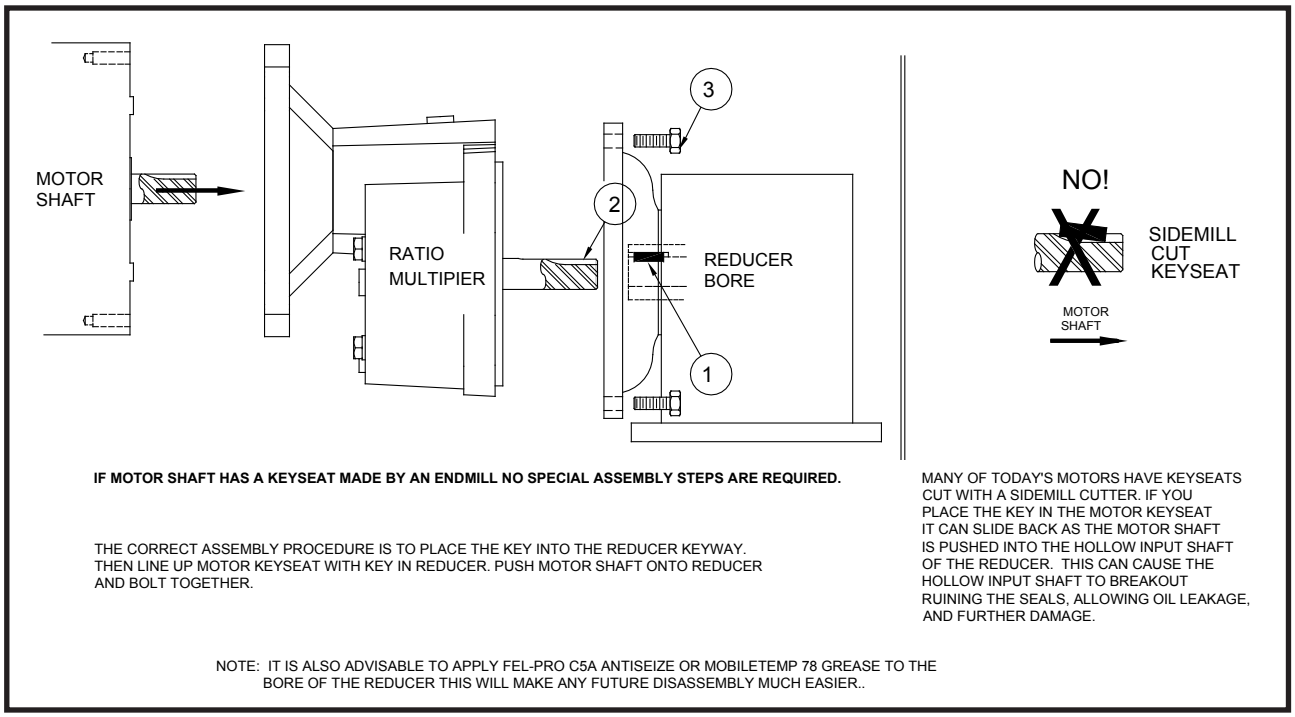

FIGURE 9

2. **VENTILATION** - During normal operation gear reducers build up heat and pressure that **MUST** be vented to protect the seals and gears. If not installed at Titan, a brass vent plug contained in a small plastic bag, will be put in a box or larger bag along with fasteners sent loose for use during field installation. Remove the top most drain plug (refer to ***FIGURE 10***) for the position of your reducer) and install the vent plug securely in place.

3. **CLEANING** - After approximately two to three weeks of operation the reducer **MUST** be drained, flushed out, and refilled to the proper level with fresh oil. (This is done to remove brass particles caused during the normal wear-in period of the worm gear.) Afterwards, the oil should be changed in your reducer every 2500 hours or evey 6 months, which ever occurs first.

CAUTION

WHERE HIGH TEMPERATURES AND/OR DIRTY ATMOSPHERE EXISTS MORE FREQUENT CHANGES MAY BE NECESSARY. PERIODICALLY CHECK REDUCER TO ENSURE THAT THE PROPER LEVEL OF OIL IS IN THE REDUCER. TOO LITTLE OIL WILL CAUSE ACCELERATED WEAR ON THE GEARS. TOO MUCH OIL CAN CAUSE OVERHEATING, SEAL DETERIORATION, AND LEAKAGE.

Standard Gear Reducer Mounting Positions & Vent Plug, Level and Drain Locations

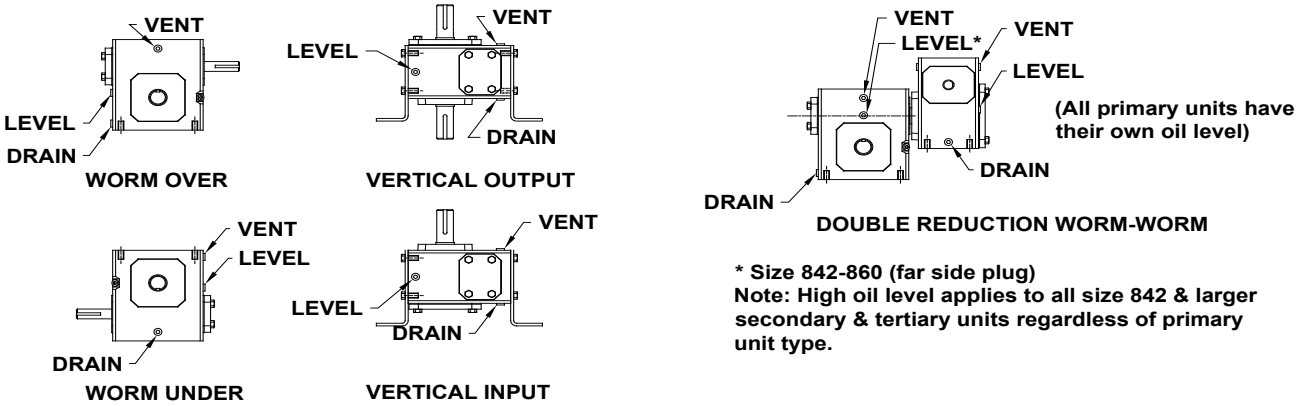

*** Size 842-860 (far side plug)**
Note: High oil level applies to all size 842 & larger secondary & tertiary units regardless of primary unit type.

Oil Capacities (ounces) - Standard Units

Mounting Position	UNIT SIZE													
	813	815	818	821	824	826	830	832	842	852	860	870*	880*	8100*
1 - Worm Over	4	12	12	20	24	40	56	72	112	188	312	35	48	72
2 - Worm Under	8	16	20	28	40	60	84	108	152	304	328	32-3/4	51-1/4	80

** Shipped Dry*

16 0z. = 1 pint
2 pints = 1 quart
4 quarts = 1 gallon
1 gallon = 128 oz. = 231 Cu. in.

FIGURE 10

4. **LUBRICATION** - The precision - made gears and bearings in our reducers require high-grade lubricants of the proper viscosity to maintain trouble- free performance. All standard reducers ordered from the factory are filled with ISO viscosity grade **Mobil Glygoyle 460 polyalkalene glycol** (**PAG**) lubricant. If oil needs to be added or changed, ONLY compatible polyglycol lubricants should be used. Contact the factory for more information.

5. **TEMPERATURE** - Most Titan Units are supplied with wormgear reducers. These units may run at temperatures between 100 degrees to 200 degrees F. (Higher temperatures are especially common during start up). There is **NO NEED TO WORRY** unless temperatures exceed 200 degrees F.

6. **GENERAL MAINTENANCE** - Regular inspection to insure the reducer bolts and screws are tight, correct alignment of shaft and/or coupling, no major oil leaks, no excessive heating and no unusual vibration or noise will insure maximum life and performance of the reducer.

BEARINGS

1. **LUBRICATION** - Bearings used on Titan Conveyors are normally pre-lubed for life. If customer requested, re-lube bearings are provided, the use of a #2 consistency lithium based grease is advised. Greasing Frequency should be as many times as necessary to maintain a small film of grease leaking at the seals. This will protect against foreign materials entering the bearing. The following list is provided to aid you in acquiring the proper grease or an equivalent.

NORMAL DUTY	HEAVY DUTY
Texaco - Multifak #2	Sun - Prestige 742EP
Mobile - Mobilux #2	Exxon - Lidok #2EP
Amoco - Lithium MP	Arco - Litholene HEP2
Shell - Alvania #2	Shell - Alvania #2EP

2. **REPLACEMENT** - If replacement of bearings become necessary remember to clean off the shaft, file smooth grooves or set screw marks, and oil the shaft before slipping on the new bearing.

CAUTION **IF BEARING DOES NOT SLIDE ON EASILY, USE A SOFT METAL BAR TO TAP AGAINST THE INNER RACE TO ASSEMBLE.**

3. **GENERAL** - Set up a weekly check on all bearings to ensure they remain tightly bolted down, set screws remain fastened securely and are properly lubricated.

V-BELT & SHEAVES

If provided on your drive package, V-Belt tension & sheave alignment are important for extended belt life. Read the following list over for proper maintenance or installation.

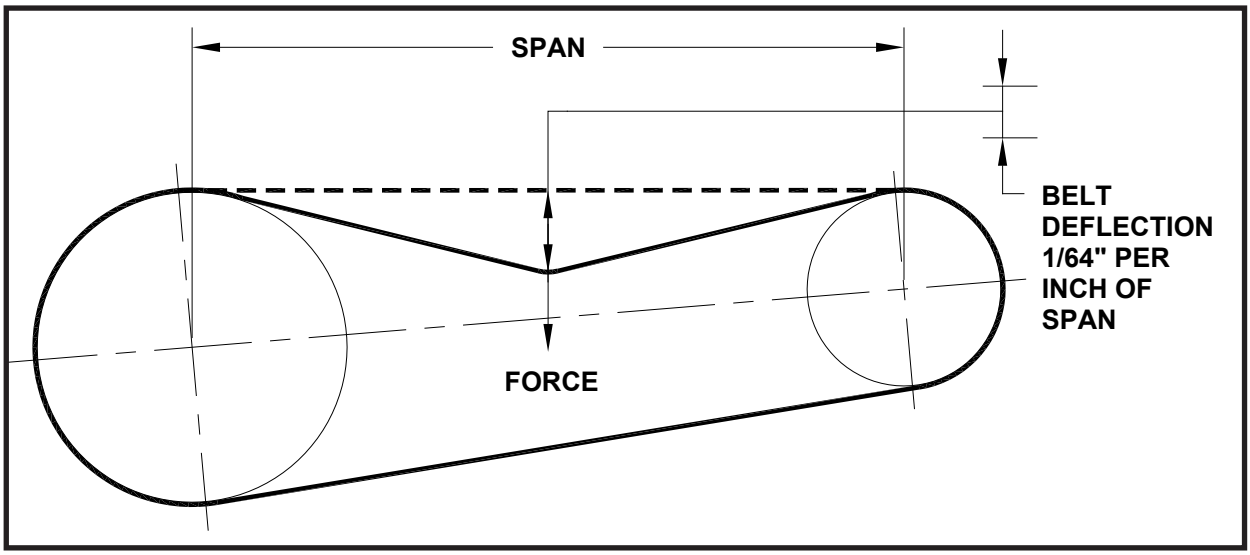

FIGURE 11

1. Never pound sheaves on or off a shaft. Make sure that the shaft diameter and sheave bore is properly sized. If there are burrs caused by set screws or sharp edges on the keyway or keyseat, remove carefully with emery cloth and/or file. Clean off metal particles and dirt from the shaft and sheave before installation.

2. Sheaves must be in line with each other and installed on shafts which are parallel with each other.

3. **DO NOT FORCE** or use the drive to install a V-belt. Have driven components loose to install the belt(s).

4. With available take-up tighten belts enough to keep from slipping during operation. Ideal belt tension is the lowest tension at which the belt will not slip under peak load conditions. The drive side of the belt(s) should be straight across and the slack side should show a slight bow.

5. Do not place new belt(s) on worn sheaves.

6. If multiple belts are used, replace all belts with a new set or matched belts.

7. Do not use belt dressing on belt(s) which are slipping. Belt dressing will damage the belt and cause early failure. Tighten belt(s) to proper tension, or if dirty, clean the belt(s) with a commercial rubber solvent.

DANGER **CHECK V-BELTS AND SHEAVES ONLY WHEN CONVEYOR IS STOPPED!**

CHAIN & SPROCKETS

For longest chain life a constant film or oil is recommended. We recommend a good quality non-detergent petroleum base oil. Use the chart below

TEMPERATURE	RECOMMENDED OIL VISCOSITY
20 degrees - 40 degrees F	SAE 20
40 degrees - 100 degrees F	SAE 30
100 degrees - 120 degrees F	SAE 40
120 degrees - 140 degrees F	SAE 50

WARNING **SHUT OFF CONVEYOR BEFORE USING OIL CAN OR BRUSH TO APPLY OIL!**

DANGER **REMEMBER - ALL GUARDS AND BOTTOM PANS, IF PROVIDED, MUST BE REPLACED BEFORE RUNNING CONVEYOR. TITAN INDUSTRIES IS NOT RESPONSIBLE FOR INJURIES CAUSED BY NOT COMPLYING WITH SAFETY INSTRUCTIONS.**

MODEL 208 INCLINE SLIDER BED BELT CONVEYOR

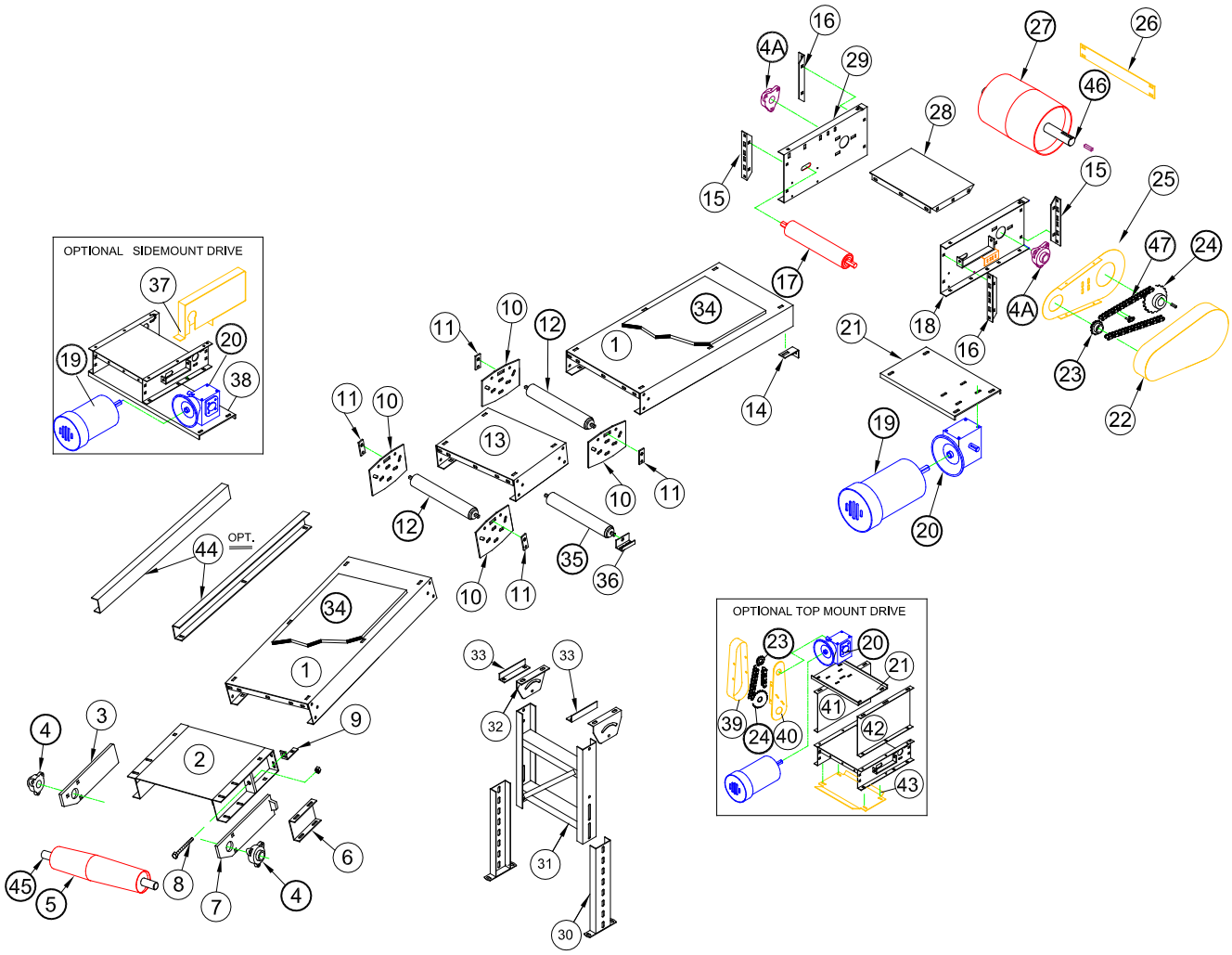

1. INTERMEDIATE FRAME
2. INFEED FRAME
3. TAKE-UP BAR L/H
4. ● 1 3/16" **BEARING, 3 BOLT FLANGE**
4A. ● 1 7/16" **BEARING, 3 BOLT FLANGE**
5. ● **TAIL PULLEY**
6. RETAINER CHANNEL
7. TAKE-UP BAR R/H
8. TAKE-UP BOLT
9. SPLICE ANGLE
10. DOUBLE NOSE OVER PLATE
11. ADJUSTMENT TAB
12. ● **NOSE OVER ROLLER**
13. DOUBLE NOSE OVER INT. FRAME
14. HEAD SECTION SPLICE ANGLE
15. CONNECTOR BRACKET L/H
16. CONNECTOR BRACKET R/H
17. ● **SNUB ROLLER**
18. HEAD PLATE R/H
19. ● **MOTOR**
20. ● **REDUCER**
21. MOTOR BASE
22. GUARD
23. ● **DRIVE SPROCKET**
24. ● **DRIVEN SPROCKET**
25. GUARD BACK
26. DRIVE SPREADER
27. ● **DRIVE PULLEY**
28. DRIVE SECTION DECK
29. HEAD PLATE L/H
30. LOWER SUPPORT
31. UPPER SUPPORT
32. SMILE BRACKET
33. SUPPORT SPLICE ANGLE
34. ● **BELT**
35. ● **RETURN ROLLER**
36. RETURN ROLLER BRACKET
37. SIDEMOUNT DRIVE GUARD
38. SIDEMOUNT DRIVE MOTOR BASE
39. GUARD TOP MT. DRIVE
40. GUARD BACK TOP MT. DRIVE
41. TOP MT. DR. ADAPTOR PLATE L/H
42. TOP MT. ADAPTOR PLATE R/H
43. LOWER GUARD TOP MT. DRIVE
44. SIDERAILS
45. ● **TAIL PULLEY SHAFT**
46. ● **DRIVE PULLEY SHAFT**
47. ● **ROLLER CHAIN**

● **RECOMMENDED SPARE PARTS TO BE STOCKED AT YOUR LOCATION**

MODEL 208 CENTER DRIVE & TAKE-UP CONVEYOR

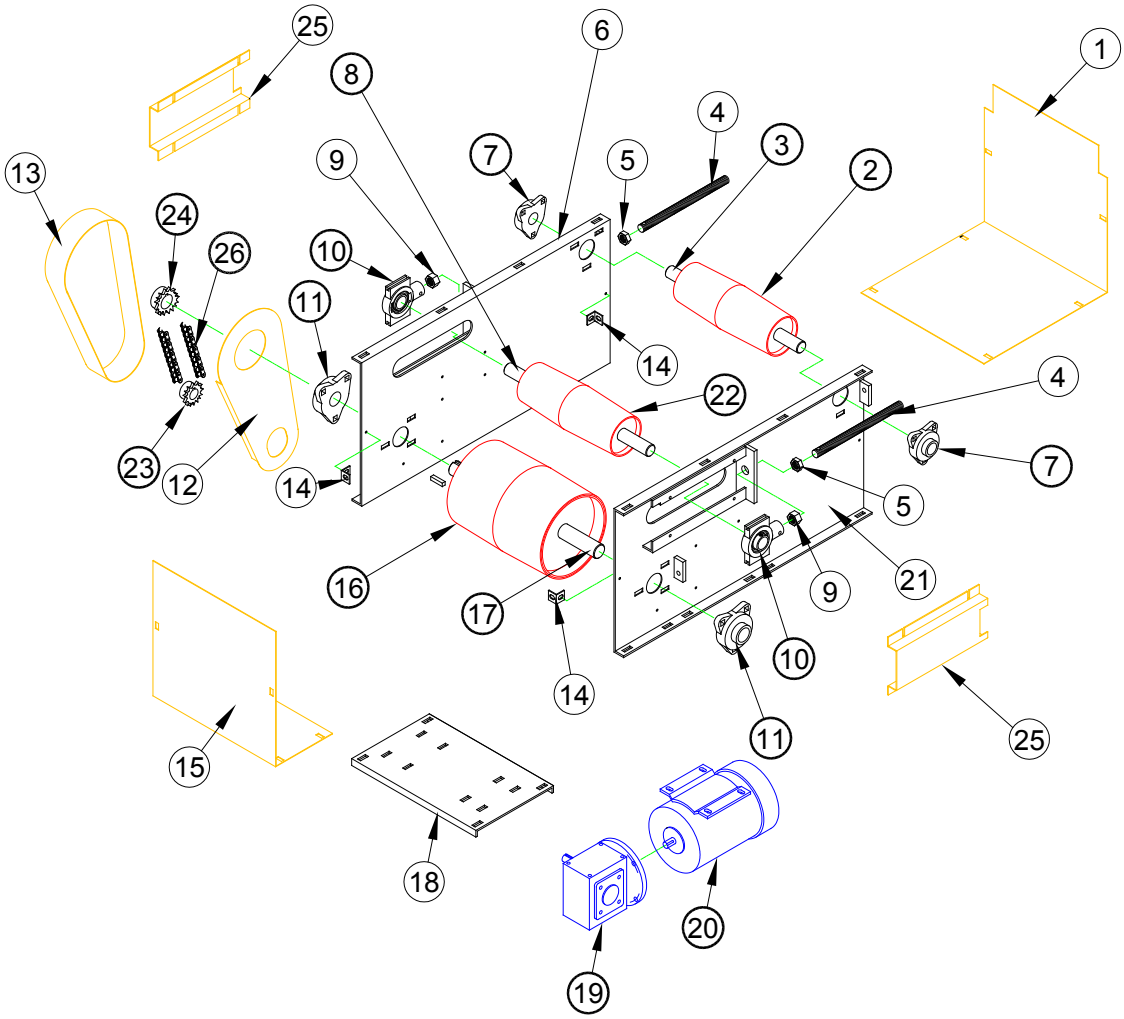

1. LARGE GUARD C.D. & T.U.
2. ● **SNUB PULLEY**
3. ● **SNUB PULLEY SHAFT**
4. THREADED ROD
5. HEX JAM NUT
6. C.D. & T.U. PLATE L/H
7. ● 1 3/16" **BEARING,3 BOLT FLANGE**
8. ● **TAKE-UP SHAFT**
9. HEX NUT
10. ● **TAKE-UP BEARING**
11. ● 1 7/16" **BEARING,3 BOLT FLANGE**
12. GUARD BACK
13. GUARD FRONT
14. L-CLIP
15. SMALL GUARD C.D.& T.U.
16. ● **DRIVE PULLEY**
17. ● **DRIVE SHAFT**
18. MOTOR BASE
19. ● **REDUCER**
20. ● **MOTOR**
21. C.D. & T.U. PLATE R/H
22. ● **TAKE-UP PULLEY**
23. ● **DRIVE SPROCKET**
24. ● **DRIVEN SPROCKET**
25. TAKE-UP GUARD
26. ● **ROLLER CHAIN**

● **RECOMMENDED SPARE PARTS TO BE STOCKED AT YOUR LOCATION**

MODEL 208 POWER FEEDER CONVEYOR

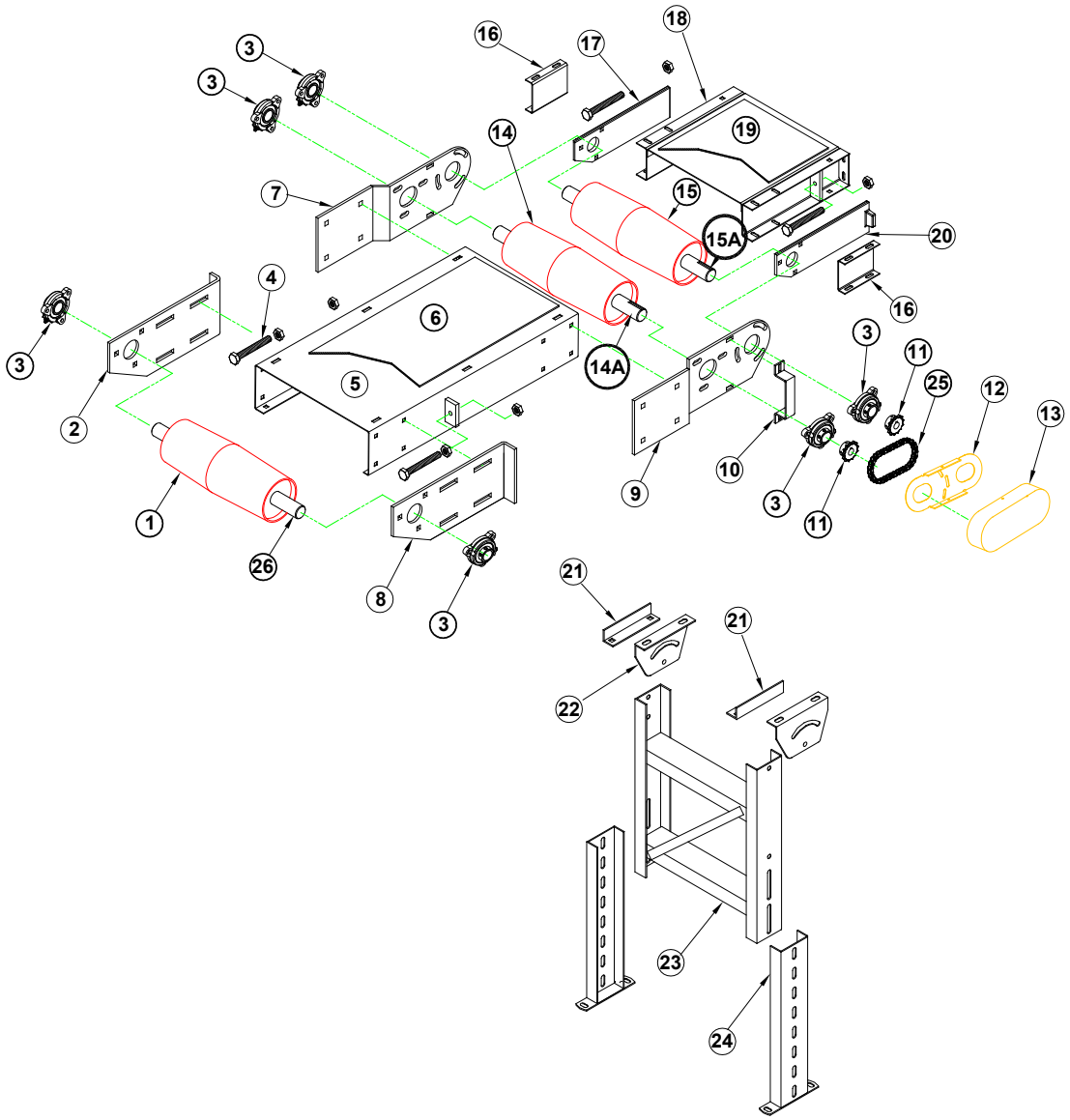

1. • **POWER FEEDER INFEED PULLEY**
2. INFEED TAKE-UP PLATE POWER FEEDER L/H
3. • **3 BOLT FLANGE BEARING**
4. TAKE-UP BOLT
5. POWER FEEDER FRAME
6. • **POWER FEEDER BELT**
7. POWER FEEDER HEADPLATE L/H
8. INFEED TAKE-UP PLATE POWER FEEDER R/H
9. POWER FEEDER HEADPLATE R/H
10. GUARD BACK BRACKET
11. • **POWER FEEDER DRIVE SPROCKET**
12. GUARD BACK
13. GUARD FRONT
14. • **POWER FEEDER DRIVE PULLEY**

14A. • **POWER FEEDER DRIVE PULLEY SHAFT**

15. • **INCLINE INFEED PULLEY**

15A. • **INCLINE INFEED PULLEY SHAFT**

16. RETAINER CHANNEL
17. TAKE-UP BAR INCLINE L/H
18. INFEED FRAME
19. • **BELT**
20. TAKE-UP BAR INCLINE R/H
21. SUPPORT SPLICE ANGLE
22. SMILE BRACKET
23. UPPER SUPPORT
24. LOWER SUPPORT
25. • **DRIVE CHAIN POWER FEEDER**
26. • **INFEED PULLEY SHAFT**

• **RECOMMENDED SPARE PARTS TO BE STOCKED AT YOUR LOCATION**